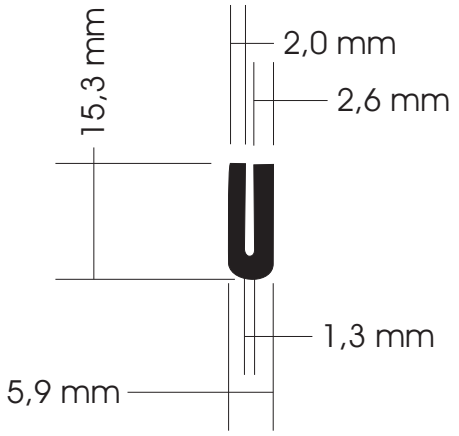321985